1977 Opamp Big Muff

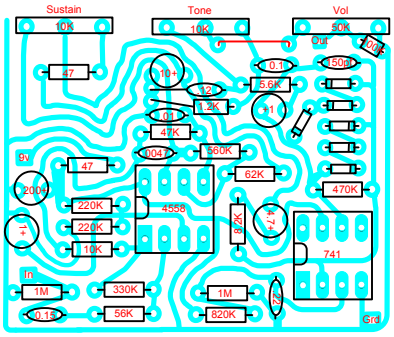

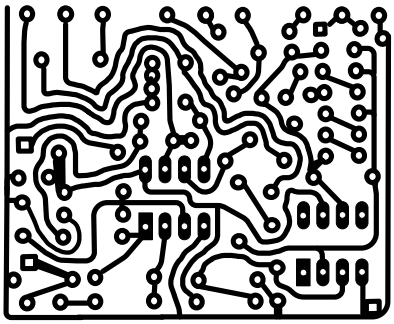

Parts List

Resistors

2 x 1M
2 x 47
2 x 220K
10K
330K
56K
47K
1.2K
2 x 10K pots

560K
62K
8.2K
5.6K
100K
820K
470K
50K pot

Capacitors

0.15uF
200uF
2 x 1uF
4.7uF
0.22uF
0.12uF
10uF
0.01uF
150pF
0.1uF
0.0047uF

IC's

LM741
JRC4558

Diodes

6 x 1N914

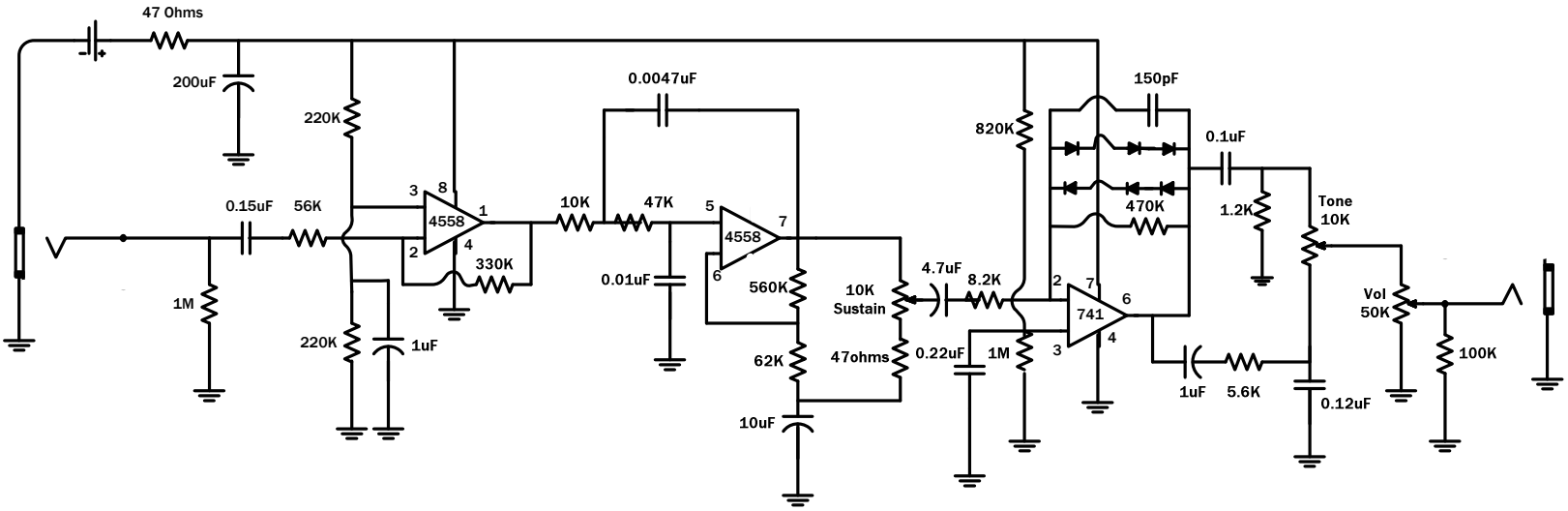

All artwork by Paul Nelson. Commercial use strictly prohibited without prior permission. Trademarks property of their respective owners.

Contact Hempathy@hempathy.org.uk